GETOtec
we live motion

# Lagereinheiten
## Support Units

www.getotec.de

# Lagereinheiten
## Support Units

GETOtec

Hauptstrasse 8
D-85630 Grasbrunn (Harthausen)

Telefon: +49 (0)8106 99935 10
Telefax: +49 (0)8106 99935 14

info@getotec.de
www.getotec.de

© Alle Rechte vorbehalten.
Nachdruck, auch auszugsweise, ist ohne unsere Genehmigung nicht gestattet.

Anmerkung:
Wir bemühen uns den Inhalt mit hoher Qualität zur Verfügung zu stellen.
Trotz höchstmöglicher Sorgfalt kann keine Gewähr und Haftung für die Richtigkeit, Aktualität oder Vollständigkeit der Inhalte und Informationen übernommen werden.
Wir behalten es uns weiterhin vor, jederzeit die Inhalte und die technischen Eigenschaften der darin enthaltenen Produkte zu aktualisieren.

© All rights reserved.
Reprinting, in whole or in part, is not permitted without our approval.

Note:
We always strive to ensure that the contents of our publications are of the highest quality.
However, although the greatest care is exercised in this regard, we cannot warrant or accept liability for the accuracy, up-todate status or completeness of the content and information in this catalog.
We reserve the right to update the content and the technical characteristics of the products in this catalog at any time.

# INHALT
# Content


1 PRODUKTÜBERSICHT - Product Overview 4

2 BESTELLSCHLÜSSEL - Ordering key 5

2.1 Festlager - Fixed bearing 5
2.2 Festlager GWFF - Fixed bearing GWFF 5
2.3 Loslager - Floating bearing 6

3 TECHNISCHE BESCHREIBUNG - Technical description 7

3.1 Klasse -Grade 7
3.2 Auswahl der Vorspannung nach Anwendungsbeispielen- Selection of preload to application examples 7

4 TECHNISCHE DATEN - Technical data 8

4.1 Festlager GAK - Fixed bearing GAK 8
4.2 Festlager GBK - Fixed bearing GBK 10
4.3 Festlager GEK - Fixed bearing GEK 12
4.4 Festlager GFK - Fixed bearing GFK 13
4.5 Festlager GWFF - Fixed bearing GWFF 15

5 ABMESSUNGEN - Dimensions 16

5.1 Festlager GAK - Fixed bearing GAK 16
5.2 Festlager GBK - Fixed bearing GBK 17
5.3 Festlager GEK - Fixed bearing GEK 18
5.4 Festlager GFK - Fixed bearing GFK 19
5.5 Festlager GWFF - Fixed bearing GWFF 21
5.6 Loslager GAF - Fixed bearing GAF 23
5.7 Loslager GBF - Fixed bearing GBF 25
5.8 Loslager GEF - Fixed bearing GEF 26
5.9 Loslager GFF - Fixed bearing GFF 27

# Lagereinheiten
## Support Units

## 1 PRODUKTÜBERSICHT
### Product Overview

| Festlager<br>Fixed bearing | | Loslager<br>Floating bearing | |
|---|---|---|---|
| schwarz gefärbt | vernickelt | schwarz gefärbt | vernickelt |
| GAK | | GAF | |
| 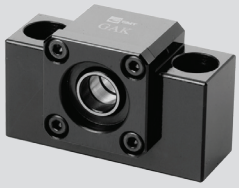 | | | |
| GBK | | GBF | |
| | 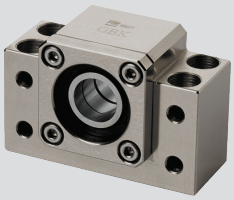 | | 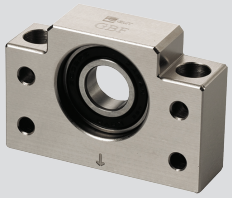 |
| GEK | | GEF | |
| 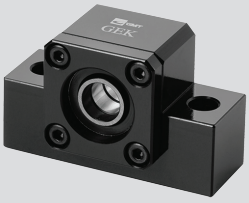 | 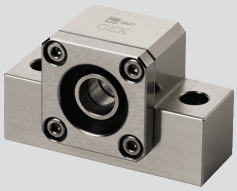 | | 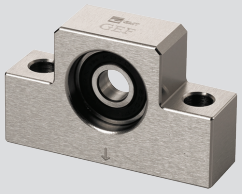 |
| GFK | | GFF | |
| 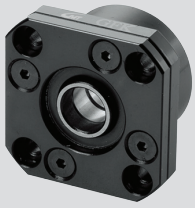 | 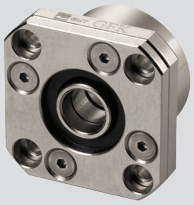 | 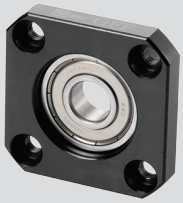 | 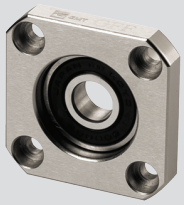 |
| GWFF | | | |
| | 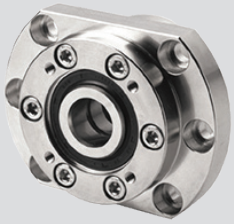 | | |

## 2 BESTELLSCHLÜSSEL
Ordering key

### 2.1 Festlager
Fixed bearing

| GAK | 12 | S | L | B | J |
|---|---|---|---|---|---|
| 1 | 2 | 3 | 4 | 5 | 6 |

| | | Code | Beschreibung<br>Description |
|---|---|---|---|
| 1 | Typ<br>Type | GAK | – |
| 2 | Baugröße<br>Size | 12 | Lagerinnendurchmesser in mm<br>Bearing inner diameter in mm |
| 3 | Klasse<br>Grade | S | Standard |
| 4 | Vorspannung<br>Preload | L | Leicht vorgespannt<br>Light pre-loaded |
| | | M | Mittel vorgespannt<br>Medium pre-loaded |
| | | H | Hoch vorgespannt<br>High pre-loaded |
| 5 | Oberflächenbehandlung<br>Surface finish | B | Schwarz gefärbt<br>Black dyed |
| | | N | Vernickelt<br>Nickel plating |
| 6 | Lagerkategorie<br>Bearing category | J | Japanische Serie<br>Japanese series |
| | | T | Taiwanesische Serie<br>Taiwanese series |

### 2.2 Festlager GWFF
Fixed bearing GWFF

| GWFF | 20 | B | DFD | J |
|---|---|---|---|---|
| 1 | 2 | 3 | 4 | 5 |

| | | Code | Beschreibung<br>Description |
|---|---|---|---|
| 1 | Typ<br>Type | GWFF | – |
| 2 | Baugröße<br>Size | 20 | Lagerinnendurchmesser in mm<br>Bearing inner diameter in mm |
| 3 | Oberflächenbehandlung<br>Surface finish | B | Schwarz gefärbt<br>Black dyed |
| | | N | Vernickelt<br>Nickel plating |
| 4 | Lagerkombination<br>Bearing combination | DF | 2 Schrägkugellager<br>2 Angular contact bearings |
| | | DFD | 3 Schrägkugellager<br>3 Angular contact bearings |
| 5 | Lagerkategorie<br>Bearing category | J | Japanische Serie<br>Japanese series |
| | | T | Taiwanesische Serie<br>Taiwanese series |

# Lagereinheiten
# Support Units

## 2.3 Loslager
### Floating bearing

| GAF | 12 | S | B | J |
|---|---|---|---|---|
| 1 | 2 | 3 | 4 | 5 |

| | | Code | Beschreibung<br>Description |
|---|---|---|---|
| 1 | Typ<br>Type | GAF | – |
| 2 | Baugröße<br>Size | 12 | – |
| 3 | Klasse<br>Grade | S | Standard |
| 4 | Oberflächenbehandlung<br>Surface finish | B | Schwarz gefärbt<br>Black dyed |
| | | N | Vernickelt<br>Nickel plating |
| 5 | Lagerkategorie<br>Bearing category | J | Japanische Serie<br>Japanese series |
| | | T | Taiwanesische Serie<br>Taiwanese series |

# 3 TECHNISCHE BESCHREIBUNG
## Technical description

## 3.1 Klasse
Grade

### 3.1.1 Festlager
Fixed bearing

Vorgespannte Schrägkugellager in drei verschiedenen Vorspannungsklassen:
Preloaded angular contact ball bearings in three different preload classes:

1. Leicht / Light
2. Mittel / Medium
3. Hoch / High

### 3.1.2 Loslager
Floating bearing

Rillenkugellager
Deep-groove roller bearings

## 3.2 Auswahl der Vorspannung nach Anwendungsbeispielen
Selection of preload to application examples

| Vorspannung<br>Preload | Anforderungen<br>Requirements | Anwendungsbeispiele<br>Application examples |
|---|---|---|
| Leicht (L)<br>Light (L) | • Kleine Vibrationen<br>• Geringe Vorschübe<br>• Belastungen in eine feste Richtung<br>• Geringe Genauigkeiten<br>• Geringe Reibkraft | • Laserschweißgerät<br>• Kleine CNC-Fräsmaschine<br>• Schweißgerät<br>• Automatischer Werkzeugwechsler<br>• Verpackungsmaschine<br>• Materialversorgung |
| | • Small vibrations<br>• Small thrusts<br>• Loads in one fixed direction<br>• Low accuracy<br>• Low frictional force | • Laser welder<br>• Small CNC mill machine<br>• Welder<br>• Automatic tool changer<br>• Packing machine<br>• Material supply equipment |
| Mittel (M)<br>Medium (M) | • Auf sich wirkende Drehmomente<br>• Arbeiten in eine Richtung<br>• Geringe Belastungen<br>• Hohe Genauigkeiten | • Automatisierte Zuführung<br>• Linearer Vorschub<br>• Präzisionsschlitten<br>• Industrieroboter<br>• NC-Drehmaschine |
| | • With a torque acting on it<br>• Working in one direction<br>• Low loads<br>• High accuracy | • Automated feeder<br>• Linear feeder<br>• Precision slide table<br>• Industrial robot<br>• NC-lathe |
| Hoch (H)<br>High (H) | • Hohe Steifigkeit<br>• Hohe Vibrationen<br>• Hoher Vorschübe<br>• Hohe Belastungen<br>• Hohe Drehmomente | • Maschinenspindel<br>• NC-Drehmaschine<br>• Z-Achsen Spindel<br>• Fräsmaschine<br>• Schleifscheibenvorschub |
| | • High rigidity<br>• High vibrations<br>• High thrusts<br>• High loads<br>• High torque | • Machining center spindle<br>• NC-lathe<br>• Z-axis spindle<br>• Milling machine<br>• Grinding wheel feeding |

# Lagereinheiten
# Support Units

## 4 TECHNISCHE DATEN
Technical data

### 4.1 Festlager GAK
Fixed bearing GAK

| Baugröße<br>Size | Lagertyp<br>Ball bearing type | Klasse<br>Grade | Kontakt-winkel<br>Contact angle | Lager-kategorie<br>Bearing category | Vor-spannung<br>Preload | Drehzahl max.<br>Speed max<br>($min^{-1}$) | Dynamische Tragzahl<br>Dyn. load<br>(kN) | Statische Tragzahl<br>Stat. load<br>(kN) |
|---|---|---|---|---|---|---|---|---|
| 06 | 706 | P5 | 30° | J | - | 58.000 | 0,795 | 2,03 |
| | | | | | L | 46.400 | | |
| | | | | | M | 37.700 | | |
| | | | | | H | 31.900 | | |
| 08 | 708 | P5 | 30° | J | - | 44.000 | 1,45 | 3,35 |
| | | | | | L | 35.200 | | |
| | | | | | M | 28.600 | | |
| | | | | | H | 24.200 | | |
| | | | 25° | T | - | 31.500 | 1,30 | 2,30 |
| | | | | | L | 20.475 | | |
| | | | | | M | 17.325 | | |
| | | | | | H | 14.175 | | |
| 10 | 7000 | P5 | 30° | J | - | 36.800 | 2,34 | 5,00 |
| | | | | | L | 29.440 | | |
| | | | | | M | 23.920 | | |
| | | | | | H | 20.240 | | |
| | | | 25° | T | - | 33.500 | 2,10 | 4,70 |
| | | | | | L | 21.775 | | |
| | | | | | M | 18.425 | | |
| | | | | | H | 15.075 | | |
| 12 | 7001 | P5 | 30° | J | - | 32.200 | 2,71 | 5,40 |
| | | | | | L | 25.760 | | |
| | | | | | M | 20.930 | | |
| | | | | | H | 17.710 | | |
| | | | 25° | T | - | 30.000 | 5,10 | 5,10 |
| | | | | | L | 19.500 | | |
| | | | | | M | 16.500 | | |
| | | | | | H | 13.500 | | |
| 15 | 7002 | P5 | 30° | J | - | 27.600 | 2,36 | 3,15 |
| | | | | | L | 22.080 | | |
| | | | | | M | 17.940 | | |
| | | | | | H | 15.180 | | |
| | | | 25° | T | - | 25.000 | 3,20 | 5,90 |
| | | | | | L | 16.250 | | |
| | | | | | M | 13.750 | | |
| | | | | | H | 11.250 | | |

| Baugröße<br>Size | Lagertyp<br>Ball bearing type | Klasse<br>Grade | Kontakt-winkel<br>Contact angle | Lager-kategorie<br>Bearing category | Vor-spannung<br>Preload | Drehzahl max.<br>Speed max<br>($min^{-1}$) | Dynamische Tragzahl<br>Dyn. load<br>(kN) | Statische Tragzahl<br>Stat. load<br>(kN) |
|---|---|---|---|---|---|---|---|---|
| 20 | 7204 | P5 | 30° | J | - | 19.550 | 7,55 | 13,60 |
| | | | | | L | 15.640 | | |
| | | | | | M | 12.708 | | |
| | | | | | H | 10.753 | | |
| | | | 25° | T | - | 17.000 | 7,80 | 14,00 |
| | | | | | L | 11.050 | | |
| | | | | | M | 9.350 | | |
| | | | | | H | 7.650 | | |
| 25 | 7205 | P5 | 30° | J | - | 17.250 | 9,45 | 15,40 |
| | | | | | L | 13.800 | | |
| | | | | | M | 11.213 | | |
| | | | | | H | 9.488 | | |
| | | | 25° | T | - | 15.000 | 9,70 | 15,80 |
| | | | | | L | 9.750 | | |
| | | | | | M | 8.250 | | |
| | | | | | H | 6.750 | | |

# Lagereinheiten
# Support Units

## 4.2 Festlager GBK
## Fixed bearing GBK

| Baugröße<br>Size | Lagertyp<br>Ball bearing type | Klasse<br>Grade | Kontakt-winkel<br>Contact angle | Lager-kategorie<br>Bearing category | Vor-spannung<br>Preload | Drehzahl max.<br>Speed max<br>($min^{-1}$) | Dynamische Tragzahl<br>Dyn. load<br>(kN) | Statische Tragzahl<br>Stat. load<br>(kN) |
|---|---|---|---|---|---|---|---|---|
| 10 | 7000 | P5 | 30° | J | - | 36.800 | 2,34 | 5,00 |
| | | | | | L | 29.440 | | |
| | | | | | M | 23.920 | | |
| | | | | | H | 20.240 | | |
| | | | 25° | T | - | 33.500 | 2,10 | 4,70 |
| | | | | | L | 21.775 | | |
| | | | | | M | 18.425 | | |
| | | | | | H | 15.075 | | |
| 12 | 7001 | P5 | 30° | J | - | 32.200 | 2,71 | 5,40 |
| | | | | | L | 25.760 | | |
| | | | | | M | 20.930 | | |
| | | | | | H | 17.710 | | |
| | | | 25° | T | - | 30.000 | 5,10 | 5,10 |
| | | | | | L | 19.500 | | |
| | | | | | M | 16.500 | | |
| | | | | | H | 13.500 | | |
| 15 | 7002 | P5 | 30° | J | - | 27.600 | 2,36 | 3,15 |
| | | | | | L | 22.080 | | |
| | | | | | M | 17.940 | | |
| | | | | | H | 15.180 | | |
| | | | 25° | T | - | 25.000 | 3,20 | 5,90 |
| | | | | | L | 16.250 | | |
| | | | | | M | 13.750 | | |
| | | | | | H | 11.250 | | |
| 17 | 7203 | P5 | 30° | J | - | 23.000 | 5,45 | 10,10 |
| | | | | | L | 18.400 | | |
| | | | | | M | 14.950 | | |
| | | | | | H | 12.650 | | |
| | | | 25° | T | - | 20.000 | 5,60 | 10,40 |
| | | | | | L | 13.000 | | |
| | | | | | M | 11.000 | | |
| | | | | | H | 9.000 | | |
| 20 | 7004 | P5 | 30° | J | - | 20.700 | 6,10 | 10,30 |
| | | | | | L | 16.560 | | |
| | | | | | M | 13.455 | | |
| | | | | | H | 11.385 | | |
| | | | 25° | T | - | 19.000 | 5,70 | 10,00 |
| | | | | | L | 12.350 | | |
| | | | | | M | 10.450 | | |
| | | | | | H | 8.550 | | |

| Baugröße<br>Size | Lagertyp<br>Ball bearing type | Klasse<br>Grade | Kontakt-winkel<br>Contact angle | Lager-kategorie<br>Bearing category | Vor-spannung<br>Preload | Drehzahl max.<br>Speed max<br>(min$^{-1}$) | Dynamische Tragzahl<br>Dyn. load<br>(kN) | Statische Tragzahl<br>Stat. load<br>(kN) |
|---|---|---|---|---|---|---|---|---|
| 25 | 7205 | P5 | 30° | J | - | 17.250 | 9,45 | 15,40 |
| | | | | | L | 13.800 | | |
| | | | | | M | 11.213 | | |
| | | | | | H | 9.488 | | |
| | | | 25° | T | - | 15.000 | 9,70 | 15,80 |
| | | | | | L | 9.750 | | |
| | | | | | M | 8.250 | | |
| | | | | | H | 6.750 | | |
| 30 | 7206 | P5 | 30° | J | - | 13.800 | 13,60 | 21,30 |
| | | | | | L | 11.040 | | |
| | | | | | M | 8.970 | | |
| | | | | | H | 7.590 | | |
| | | | 25° | T | - | 12.000 | 13,50 | 22,10 |
| | | | | | L | 7.800 | | |
| | | | | | M | 6.600 | | |
| | | | | | H | 5.400 | | |
| 35 | 7207 | P5 | 30° | J | - | 12.075 | 18,50 | 28,20 |
| | | | | | L | 9.660 | | |
| | | | | | M | 7.849 | | |
| | | | | | H | 6.641 | | |
| | | | 25° | T | - | 8.500 | 18,00 | 29,20 |
| | | | | | L | 5.525 | | |
| | | | | | M | 4.675 | | |
| | | | | | H | 3.825 | | |
| 40 | 7208 | P5 | 30° | J | - | 11.040 | 23,30 | 33,50 |
| | | | | | L | 8.832 | | |
| | | | | | M | 7.176 | | |
| | | | | | H | 6.072 | | |
| | | | 25° | T | - | 7.500 | 25,40 | 36,80 |
| | | | | | L | 4.875 | | |
| | | | | | M | 4.125 | | |
| | | | | | H | 3.375 | | |

# Lagereinheiten
## Support Units

### 4.3 Festlager GEK
Fixed bearing GEK

| Baugröße<br>Size | Lagertyp<br>Ball bearing type | Klasse<br>Grade | Kontakt-winkel<br>Contact angle | Lager-kategorie<br>Bearing category | Vor-spannung<br>Preload | Drehzahl max.<br>Speed max<br>(min$^{-1}$) | Dynamische Tragzahl<br>Dyn. load<br>(kN) | Statische Tragzahl<br>Stat. load<br>(kN) |
|---|---|---|---|---|---|---|---|---|
| 06 | 706 | P5 | 30° | J | - | 58.000 | 0,795 | 2,03 |
| | | | | | L | 46.400 | | |
| | | | | | M | 37.700 | | |
| | | | | | H | 31.900 | | |
| 08 | 708 | P5 | 30° | J | - | 44.000 | 1,45 | 3,35 |
| | | | | | L | 35.200 | | |
| | | | | | M | 28.600 | | |
| | | | | | H | 24.200 | | |
| | | | 25° | T | - | 31.500 | 1,30 | 2,30 |
| | | | | | L | 20.475 | | |
| | | | | | M | 17.325 | | |
| | | | | | H | 14.175 | | |
| 10 | 7000 | P5 | 30° | J | - | 36.800 | 2,34 | 5,00 |
| | | | | | L | 29.440 | | |
| | | | | | M | 23.920 | | |
| | | | | | H | 20.240 | | |
| | | | 25° | T | - | 33.500 | 2,10 | 4,70 |
| | | | | | L | 21.775 | | |
| | | | | | M | 18.425 | | |
| | | | | | H | 15.075 | | |
| 12 | 7001 | P5 | 30° | J | - | 32.200 | 2,71 | 5,40 |
| | | | | | L | 25.760 | | |
| | | | | | M | 20.930 | | |
| | | | | | H | 17.710 | | |
| | | | 25° | T | - | 30.000 | 5,10 | 5,10 |
| | | | | | L | 19.500 | | |
| | | | | | M | 16.500 | | |
| | | | | | H | 13.500 | | |
| 15 | 7002 | P5 | 30° | J | - | 27.600 | 2,36 | 3,15 |
| | | | | | L | 22.080 | | |
| | | | | | M | 17.940 | | |
| | | | | | H | 15.180 | | |
| | | | 25° | T | - | 25.000 | 3,20 | 5,90 |
| | | | | | L | 16.250 | | |
| | | | | | M | 13.750 | | |
| | | | | | H | 11.250 | | |
| 20 | 7204 | P5 | 30° | J | - | 19.550 | 7,55 | 13,60 |
| | | | | | L | 15.640 | | |
| | | | | | M | 12.708 | | |
| | | | | | H | 10.753 | | |
| | | | 25° | T | - | 17.000 | 7,80 | 14,00 |
| | | | | | L | 11.050 | | |
| | | | | | M | 9.350 | | |
| | | | | | H | 7.650 | | |

## 4.4 Festlager GFK
## Fixed bearing GFK

| Baugröße<br>Size | Lagertyp<br>Ball bearing type | Klasse<br>Grade | Kontakt-winkel<br>Contact angle | Lager-kategorie<br>Bearing category | Vor-spannung<br>Preload | Drehzahl max.<br>Speed max<br>(min$^{-1}$) | Dynamische Tragzahl<br>Dyn. load<br>(kN) | Statische Tragzahl<br>Stat. load<br>(kN) |
|---|---|---|---|---|---|---|---|---|
| 06 | 706 | P5 | 30° | J | - | 58.000 | 0,795 | 2,03 |
| | | | | | L | 46.400 | | |
| | | | | | M | 37.700 | | |
| | | | | | H | 31.900 | | |
| 08 | 708 | P5 | 30° | J | - | 44.000 | 1,45 | 3,35 |
| | | | | | L | 35.200 | | |
| | | | | | M | 28.600 | | |
| | | | | | H | 24.200 | | |
| | | | 25° | T | - | 31.500 | 1,30 | 2,30 |
| | | | | | L | 20.475 | | |
| | | | | | M | 17.325 | | |
| | | | | | H | 14.175 | | |
| 10 | 7000 | P5 | 30° | J | - | 36.800 | 2,34 | 5,00 |
| | | | | | L | 29.440 | | |
| | | | | | M | 23.920 | | |
| | | | | | H | 20.240 | | |
| | | | 25° | T | - | 33.500 | 2,10 | 4,70 |
| | | | | | L | 21.775 | | |
| | | | | | M | 18.425 | | |
| | | | | | H | 15.075 | | |
| 12 | 7001 | P5 | 30° | J | - | 32.200 | 2,71 | 5,40 |
| | | | | | L | 25.760 | | |
| | | | | | M | 20.930 | | |
| | | | | | H | 17.710 | | |
| | | | 25° | T | - | 30.000 | 5,10 | 5,10 |
| | | | | | L | 19.500 | | |
| | | | | | M | 16.500 | | |
| | | | | | H | 13.500 | | |
| 15 | 7002 | P5 | 30° | J | - | 27.600 | 2,36 | 3,15 |
| | | | | | L | 22.080 | | |
| | | | | | M | 17.940 | | |
| | | | | | H | 15.180 | | |
| | | | 25° | T | - | 25.000 | 3,20 | 5,90 |
| | | | | | L | 16.250 | | |
| | | | | | M | 13.750 | | |
| | | | | | H | 11.250 | | |
| 17 | 7203 | P5 | 30° | J | - | 23.000 | 5,45 | 10,10 |
| | | | | | L | 18.400 | | |
| | | | | | M | 14.950 | | |
| | | | | | H | 12.650 | | |
| | | | 25° | T | - | 20.000 | 5,60 | 10,40 |
| | | | | | L | 13.000 | | |
| | | | | | M | 11.000 | | |
| | | | | | H | 9.000 | | |

# Lagereinheiten
## Support Units

| Baugröße<br>Size | Lagertyp<br>Ball bearing type | Klasse<br>Grade | Kontakt-winkel<br>Contact angle | Lager-kategorie<br>Bearing category | Vor-spannung<br>Preload | Drehzahl max.<br>Speed max<br>($min^{-1}$) | Dynamische Tragzahl<br>Dyn. load<br>(kN) | Statische Tragzahl<br>Stat. load<br>(kN) |
|---|---|---|---|---|---|---|---|---|
| 20 | 7204 | P5 | 30° | J | - | 19.550 | 7,55 | 13,60 |
| | | | | | L | 15.640 | | |
| | | | | | M | 12.708 | | |
| | | | | | H | 10.753 | | |
| | | | 25° | T | - | 17.000 | 7,80 | 14,00 |
| | | | | | L | 11.050 | | |
| | | | | | M | 9.350 | | |
| | | | | | H | 7.650 | | |
| 25 | 7205 | P5 | 30° | J | - | 17.250 | 9,45 | 15,40 |
| | | | | | L | 13.800 | | |
| | | | | | M | 11.213 | | |
| | | | | | H | 9.488 | | |
| | | | 25° | T | - | 15.000 | 9,70 | 15,80 |
| | | | | | L | 9.750 | | |
| | | | | | M | 8.250 | | |
| | | | | | H | 6.750 | | |
| 30 | 7206 | P5 | 30° | J | - | 13.800 | 13,60 | 21,30 |
| | | | | | L | 11.040 | | |
| | | | | | M | 8.970 | | |
| | | | | | H | 7.590 | | |
| | | | 25° | T | - | 12.000 | 13,50 | 22,10 |
| | | | | | L | 7.800 | | |
| | | | | | M | 6.600 | | |
| | | | | | H | 5.400 | | |

## 4.5 Festlager GWFF
## Fixed bearing GWFF

| Baugröße<br>Size | Lagertyp<br>Ball bearing type | Klasse<br>Grade | Kontakt-winkel<br>Contact angle | Lager-kategorie<br>Bearing category | Lager-kombination<br>Bearing combination | Drehzahl max.<br>Speed max<br>(min$^{-1}$) | Dynamische Tragzahl<br>Dyn. load<br>(kN) | Statische Tragzahl<br>Stat. load<br>(kN) |
|---|---|---|---|---|---|---|---|---|
| 17 | 17TAC47B | P5 | 60° | J | - | 6.000 | 21,90 | 35,50 |
| | | | | | DF | 5.100 | 21,90 | 35,50 |
| | | | | | DFD | 4.800 | 26,60 | 53,00 |
| | | | | T | - | 5.400 | 24,30 | 39,50 |
| | | | | | DF | 4.590 | 24,30 | 39,50 |
| | | | | | DFD | 4.320 | 25,70 | 51,50 |
| 20 | 20TAC47B | P5 | 60° | J | - | 6.000 | 21,90 | 35,50 |
| | | | | | DF | 5.100 | 21,90 | 35,50 |
| | | | | | DFD | 4.800 | 26,60 | 53,00 |
| | | | | T | - | 5.400 | 24,30 | 39,50 |
| | | | | | DF | 4.590 | 24,30 | 39,50 |
| | | | | | DFD | 4.320 | 25,70 | 51,50 |
| 25 | 25TAC62B | P5 | 60° | J | - | 4.500 | 28,50 | 46,50 |
| | | | | | DF | 3.825 | 28,50 | 46,50 |
| | | | | | DFD | 3.600 | 40,50 | 81,50 |
| | | | | T | - | 4.050 | 29,20 | 47,50 |
| | | | | | DF | 3.443 | 29,20 | 47,50 |
| | | | | | DFD | 3.240 | 40,00 | 80,00 |
| 30 | 30TAC62B | P5 | 60° | J | - | 4.300 | 29,20 | 47,50 |
| | | | | | DF | 3.655 | 29,20 | 47,50 |
| | | | | | DFD | 3.440 | 43,00 | 86,00 |
| | | | | T | - | 3.870 | 29,20 | 47,50 |
| | | | | | DF | 3.290 | 29,20 | 47,50 |
| | | | | | DFD | 3.096 | 40,00 | 80,00 |
| 35 | 35TAC72B | P5 | 60° | J | - | 3.600 | 31,00 | 50,50 |
| | | | | | DF | 3.060 | 31,00 | 50,50 |
| | | | | | DFD | 2.880 | 50,00 | 100,00 |
| | | | | T | - | 3.240 | 31,00 | 50,50 |
| | | | | | DF | 2.754 | 31,00 | 50,50 |
| | | | | | DFD | 2.592 | 47,50 | 95,00 |
| 40 | 40TAC72B | P5 | 60° | J | - | 3.600 | 31,50 | 51,50 |
| | | | | | DF | 3.060 | 31,50 | 51,50 |
| | | | | | DFD | 2.880 | 52,00 | 104,00 |
| | | | | T | - | 3.240 | 31,00 | 50,50 |
| | | | | | DF | 2.754 | 31,00 | 50,50 |
| | | | | | DFD | 2.592 | 47,50 | 95,00 |

# Lagereinheiten
# Support Units

## 5 ABMESSUNGEN
Dimensions

### 5.1 Festlager GAK
Fixed bearing GAK

GAK06 - GAK20

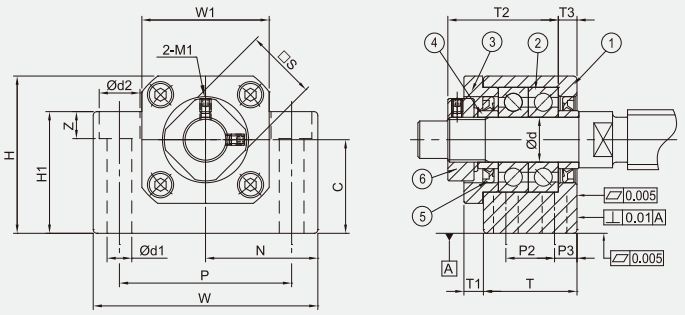


GAK25

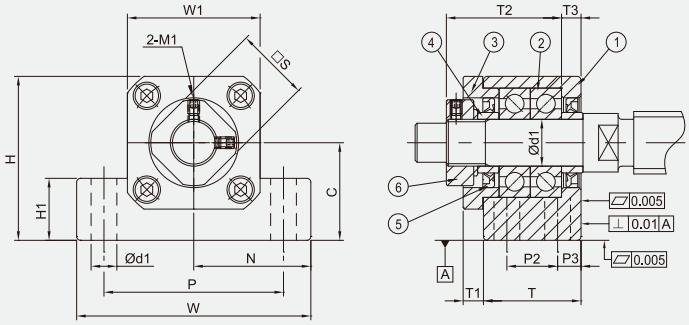


Empfohlene Endenbearbeitung der Spindel
Recommended end machining of the spindle

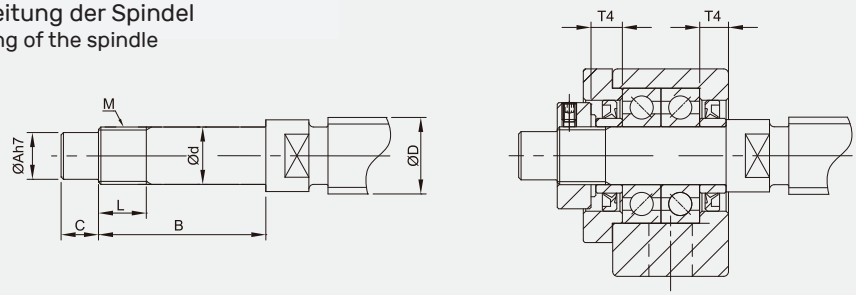


| Baugröße Size | ød | T | T1 | T2 | T3 | $W_{-0,04}$ | W1 | H | H1 | $N_{\pm 0,02}$ | $C_{-0,02}$ | P | P2 | P3 | ød1 |
|---|---|---|---|---|---|---|---|---|---|---|---|---|---|---|---|
| 06 | 6 | 20 | 5,5 | 22 | 3,5 | 42 | 18 | 25 | 20 | 21 | 13 | 30 | - | - | 5,5 |
| 08 | 8 | 23 | 7 | 26 | 4 | 52 | 25 | 32 | 26 | 26 | 17 | 38 | - | - | 6 |
| 10 | 10 | 24 | 6 | 29,5 | 6 | 70 | 36 | 43 | 35 | 35 | 25 | 52 | - | - | 8,7 |
| 12 | 12 | 24 | 6 | 29,5 | 6 | 70 | 36 | 43 | 35 | 35 | 25 | 52 | - | - | 8,7 |
| 15 | 15 | 25 | 6 | 32 | 5 | 80 | 40 | 50 | 40 | 40 | 30 | 60 | - | - | 10,7 |
| 20 | 20 | 42 | 10 | 50 | 10 | 95 | 56 | 58 | 45 | 47,5 | 30 | 75 | 22 | 10 | 10,7 |
| 25 | 25 | 48 | 13 | 60 | 14 | 105 | 66 | 68 | 25 | 52,5 | 35 | 85 | 30 | 9 | 11 |

| | | | | | Empfohlene Endenbearbeitung der Spindel<br>Recommended end machining of the spindle | | | | | | | |
|---|---|---|---|---|---|---|---|---|---|---|---|---|
| Baugröße Size | ød2 | Z | M1 | S | øD | ød | øA | B | C | M | L | T4 |
| 06 | 9,5 | 7 | M3 | 12 | 8/10 | $6^{-0,005}_{-0,012}$ | 5 | 27 | 8 | M6x0,75 | 6 | 5 |
| 08 | 11 | 12 | M3 | 14 | 10/12 | $8^{-0,005}_{-0,012}$ | 6,5 | 31,5 | 7,5 | M8x1 | 7 | 5,5 |
| 10 | 14 | 11 | M3 | 16 | 12/14/15 | $10^{-0,005}_{-0,012}$ | 8 | 36 | 15 | M10x1 | 11 | 5,5 |
| 12 | 14 | 11 | M3 | 19 | 14/15/16 | $12^{-0,005}_{-0,012}$ | 10 | 36 | 15 | M12x1 | 11 | 5,5 |
| 15 | 17 | 15 | M3 | 22 | 18/20 | $15^{-0,005}_{-0,014}$ | 12 | 47 | 20 | M15x1 | 13 | 6 |
| 20 | 17 | 15 | M4 | 30 | 25/28/30 | $20^{-0,005}_{-0,014}$ | 17 | 62 | 25 | M20x1 | 17 | 11 |
| 25 | - | - | M5 | 35 | 28/30/32 | $25^{-0,005}_{-0,014}$ | 22 | 75 | 18 | M25x1,5 | 20 | 15 |

Abmessungen in mm
Dimensions in mm

## 5.2 Festlager GBK
### Fixed bearing GBK

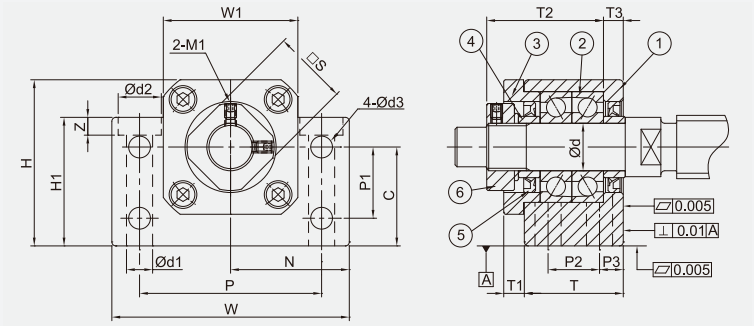


Empfohlene Endenbearbeitung der Spindel
Recommended end machining of the spindle

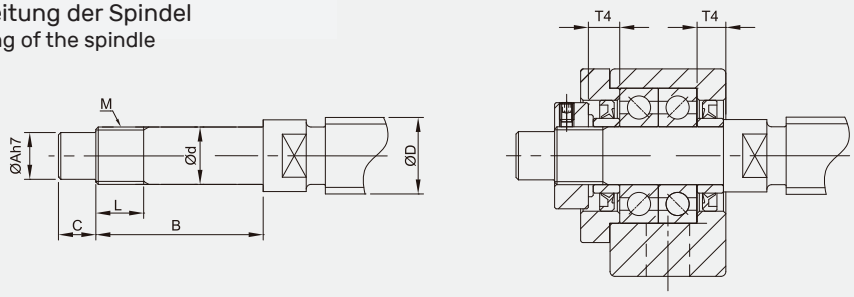


| Baugröße Size | ød | T | T1 | T2 | T3 | $W_{-0,04}$ | W1 | H | H1 | $N_{\pm 0,02}$ | $C_{-0,02}$ | P | P1 | P2 | P3 |
|---|---|---|---|---|---|---|---|---|---|---|---|---|---|---|---|
| 10 | 10 | 25 | 5 | 29,5 | 5 | 60 | 34 | 39 | 32,5 | 30 | 22 | 46 | 15 | 13 | 6 |
| 12 | 12 | 25 | 5 | 29,5 | 5 | 60 | 34 | 42 | 32,5 | 30 | 25 | 46 | 18 | 13 | 6 |
| 15 | 15 | 27 | 6 | 32 | 6 | 70 | 38 | 47 | 38 | 35 | 28 | 54 | 18 | 15 | 6 |
| 17 | 17 | 35 | 9 | 44 | 7 | 86 | 48 | 63 | 55 | 43 | 39 | 68 | 28 | 19 | 8 |
| 20 | 20 | 35 | 8 | 43 | 8 | 88 | 50 | 59 | 50 | 44 | 34 | 70 | 22 | 19 | 8 |
| 25 | 25 | 42 | 12 | 54 | 9 | 106 | 62 | 79 | 70 | 53 | 48 | 85 | 33 | 22 | 10 |
| 30 | 30 | 45 | 14 | 61 | 9 | 128 | 74 | 88 | 78 | 64 | 51 | 102 | 33 | 23 | 11 |
| 35 | 35 | 50 | 14 | 67 | 12 | 140 | 86 | 95 | 79 | 70 | 52 | 114 | 35 | 26 | 12 |
| 40 | 40 | 61 | 18 | 76 | 15 | 160 | 98 | 109 | 90 | 80 | 60 | 130 | 37 | 33 | 14 |

| | | | | | | | Empfohlene Endenbearbeitung der Spindel<br>Recommended end machining of the spindle | | | | | | | |
|---|---|---|---|---|---|---|---|---|---|---|---|---|---|---|
| Baugröße Size | ød1 | ød2 | ød3 | Z | M1 | S | øD | ød | øA | B | C | M | L | T4 |
| 10 | 6,3 | 10,5 | 5,5 | 6,5 | M3 | 16 | 12/14/15 | $10^{-0,005}_{-0,012}$ | 8 | 36 | 15 | M10x1 | 16 | 5,5 |
| 12 | 6,3 | 10,5 | 5,5 | 1,5 | M3 | 19 | 14/15/16 | $12^{-0,005}_{-0,012}$ | 10 | 36 | 15 | M12x1 | 14 | 5,5 |
| 15 | 6,3 | 10,5 | 5,5 | 6,5 | M3 | 22 | 18/20 | $15^{-0,005}_{-0,014}$ | 12 | 40 | 20 | M15x1 | 12 | 6 |
| 17 | 8,7 | 14 | 6,6 | 8,6 | M4 | 24 | 20/25 | $17^{-0,005}_{-0,014}$ | 15 | 53 | 23 | M17x1 | 17 | 7 |
| 20 | 8,7 | 14 | 6,6 | 8,5 | M4 | 30 | 25/28 | $20^{-0,005}_{-0,014}$ | 17 | 53 | 25 | M20x1 | 15 | 8 |
| 25 | 10,7 | 17,5 | 9 | 10,8 | M5 | 35 | 32/36 | $25^{-0,005}_{-0,014}$ | 20 | 65 | 30 | M25x1,5 | 18 | 9 |
| 30 | 13,7 | 20 | 11 | 13 | M6 | 40 | 36/40 | $30^{-0,005}_{-0,015}$ | 25 | 72 | 38 | M30x1,5 | 25 | 9 |
| 35 | 13,7 | 20 | 11 | 13 | M8 | 50 | 45 | $35^{-0,005}_{-0,015}$ | 30 | 81 | 45 | M35x1,5 | 28 | 12 |
| 40 | 17,7 | 26 | 14 | 17,5 | M8 | 50 | 50 | $40^{-0,005}_{-0,015}$ | 35 | 93 | 50 | M40x1,5 | 35 | 15 |

Abmessungen in mm
Dimensions in mm

# Lagereinheiten
# Support Units

## 5.3 Festlager GEK
### Fixed bearing GEK

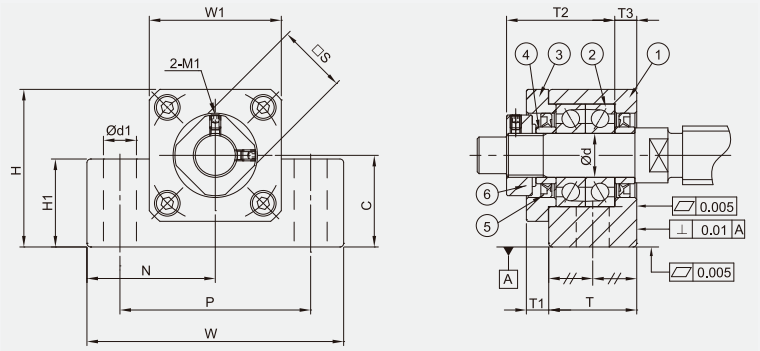


Empfohlene Endenbearbeitung der Spindel
Recommended end machining of the spindle

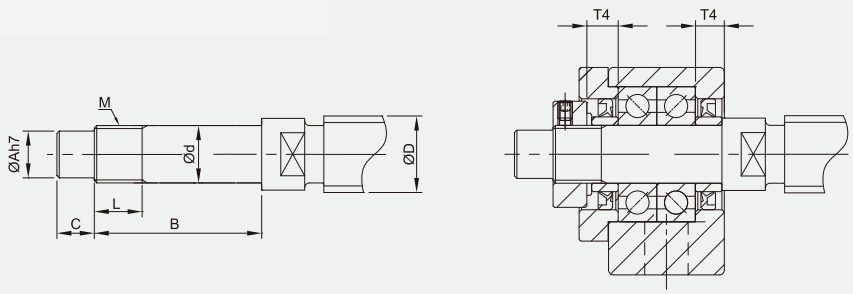


| Baugröße Size | ød | T | T1 | T2 | T3 | $W_{-0,04}$ | W1 | H | H1 | $N_{\pm 0,02}$ | $C_{-0,02}$ | P | ød1 | M1 | S |
|---|---|---|---|---|---|---|---|---|---|---|---|---|---|---|---|
| 06 | 6 | 20 | 5,5 | 22 | 3,5 | 42 | 20 | 25 | 12 | 21 | 13 | 30 | 5,2 | M3 | 12 |
| 08 | 8 | 23 | 7 | 26 | 4 | 52 | 27 | 32 | 16 | 26 | 17 | 38 | 6,3 | M3 | 14 |
| 10 | 10 | 24 | 6 | 29,5 | 6 | 70 | 36 | 43 | 24 | 35 | 25 | 52 | 9 | M3 | 16 |
| 12 | 12 | 24 | 6 | 29,5 | 6 | 70 | 36 | 43 | 24 | 35 | 25 | 52 | 9 | M3 | 19 |
| 15 | 15 | 25 | 6 | 32 | 5 | 80 | 40 | 50 | 25 | 40 | 30 | 60 | 11 | M3 | 22 |
| 20 | 20 | 42 | 10 | 50 | 10 | 95 | 56 | 58 | 25 | 47,5 | 30 | 75 | 11 | M4 | 30 |

| | Empfohlene Endenbearbeitung der Spindel<br>Recommended end machining of the spindle | | | | | | | |
|---|---|---|---|---|---|---|---|---|
| Baugröße Size | øD | ød | øA | B | C | M | L | T4 |
| 06 | 8 | $6^{-0,005}_{-0,012}$ | 4 | 28 | 8 | M6x0,75 | 8 | 5 |
| 08 | 10/12 | $8^{-0,005}_{-0,012}$ | 6 | 32 | 9 | M8x1 | 10 | 5,5 |
| 10 | 12/14/15 | $10^{-0,005}_{-0,012}$ | 8 | 36 | 15 | M10x1 | 11 | 5,5 |
| 12 | 14/15/16 | $12^{-0,005}_{-0,012}$ | 10 | 36 | 15 | M12x1 | 11 | 5,5 |
| 15 | 18/20 | $15^{-0,005}_{-0,014}$ | 12 | 40 | 20 | M15x1 | 13 | 6 |
| 20 | 25/28/30 | $20^{-0,005}_{-0,014}$ | 17 | 62 | 25 | M20x1 | 17 | 11 |

Abmessungen in mm
Dimensions in mm

## 5.4 Festlager GFK
### Fixed bearing GFK

GFK06 - GFK08

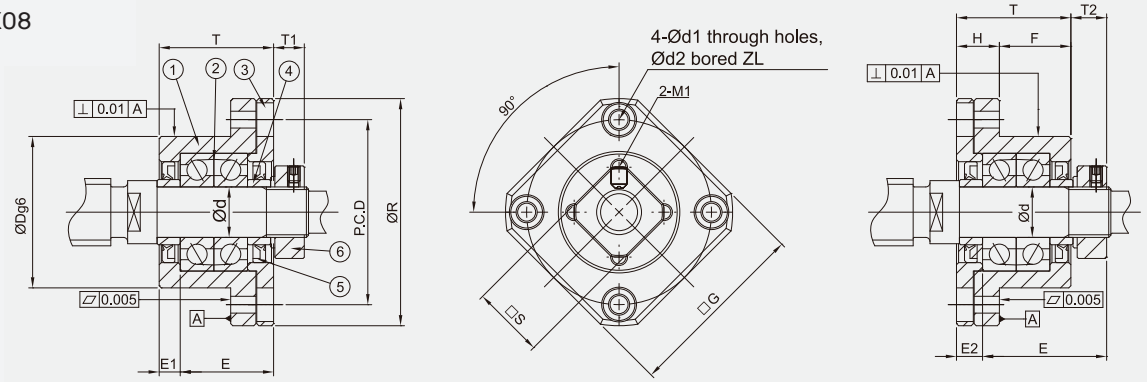


GFK10 - GFK30

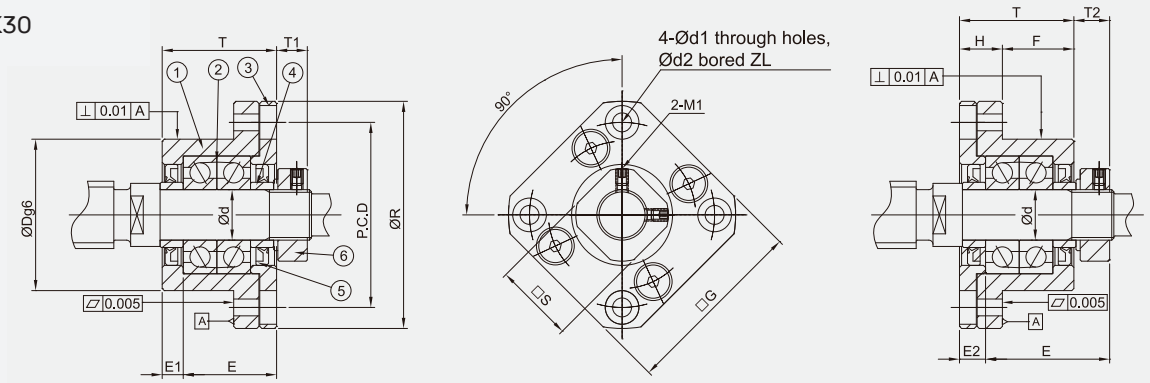


| | | | | | | | | | Installation A | | Installation B | | | | |
|---|---|---|---|---|---|---|---|---|---|---|---|---|---|---|---|
| Baugröße Size | ød | T | øR | G | H | F | øDg6 | E | T1 | E1 | T2 | E2 | PCD | ød1 | ød2 |
| 06 | 6 | 20 | 36 | 28 | 7 | 13 | 22 $^{-0,007}_{-0,020}$ | 22 | 5,5 | 3,5 | 6,5 | 4,5 | 28 | 3,4 | 6 |
| 08 | 8 | 23 | 43 | 35 | 9 | 14 | 28 $^{-0,007}_{-0,020}$ | 26 | 7 | 4 | 8 | 5 | 35 | 3,4 | 6 |
| 10 | 10 | 27 | 52 | 42 | 10 | 17 | 34 $^{-0,009}_{-0,025}$ | 29,5 | 7,3 | 5 | 8,5 | 6 | 42 | 4,5 | 8 |
| 12 | 12 | 27 | 54 | 44 | 10 | 17 | 36 $^{-0,009}_{-0,025}$ | 29,5 | 7,3 | 5 | 8,5 | 6 | 44 | 4,5 | 8 |
| 15 | 15 | 32 | 63 | 52 | 15 | 17 | 40 $^{-0,009}_{-0,025}$ | 36 | 9,8 | 6 | 12 | 8 | 50 | 5,5 | 9,5 |
| 17 | 17 | 45 | 77 | 61 | 22 | 23 | 50 $^{-0,009}_{-0,025}$ | 47 | 11 | 9 | 14 | 12 | 62 | 6,6 | 11 |
| 20 | 20 | 52 | 85 | 68 | 22 | 30 | 57 $^{-0,010}_{-0,029}$ | 50 | 7,8 | 10 | 12 | 14 | 70 | 6,5 | 11 |
| 25 | 25 | 57 | 98 | 79 | 27 | 30 | 63 $^{-0,010}_{-0,029}$ | 60 | 12,8 | 10 | 20 | 17 | 80 | 9 | 15 |
| 30 | 30 | 62 | 117 | 93 | 30 | 32 | 75 $^{-0,010}_{-0,029}$ | 61 | 10,8 | 12 | 17 | 18 | 95 | 11 | 17,5 |

| Baugröße Size | Z | M1 | S |
|---|---|---|---|
| 06 | 3,3 | M3 | 12 |
| 08 | 3,3 | M3 | 14 |
| 10 | 4 | M3 | 16 |
| 12 | 4 | M3 | 19 |
| 15 | 6 | M3 | 22 |
| 17 | 10 | M4 | 24 |
| 20 | 10 | M4 | 30 |
| 25 | 13 | M5 | 35 |
| 30 | 15 | M6 | 40 |

Abmessungen in mm
Dimensions in mm

# Lagereinheiten
## Support Units

Empfohlene Endenbearbeitung der Spindel
Recommended end machining of the spindle

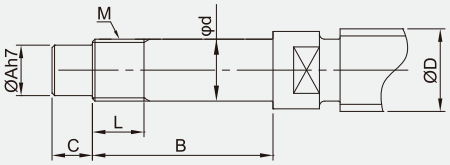


Installation A

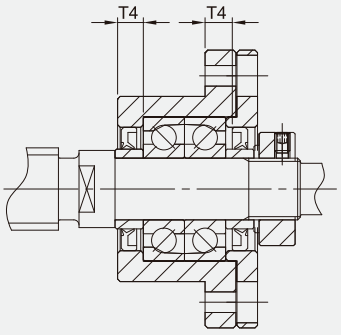


Installation B

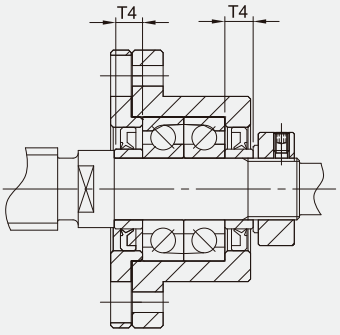


| Baugröße Size | øD | | ød | øA | B | C | M | L | T4 |
|---|---|---|---|---|---|---|---|---|---|
| 06 | 8 | 6 | -0,005 -0,012 | 4 | 28 | 8 | M6x0,75 | 8 | 5 |
| 08 | 10/12 | 8 | -0,005 -0,012 | 6 | 32 | 9 | M8x1 | 10 | 5,5 |
| 10 | 12/14/15 | 10 | -0,005 -0,012 | 8 | 36 | 15 | M10x1 | 11 | 5,5 |
| 12 | 14/15/16 | 12 | -0,005 -0,012 | 10 | 36 | 15 | M12x1 | 11 | 5,5 |
| 15 | 18/20 | 15 | -0,005 -0,014 | 12 | 47 | 20 | M15x1 | 13 | 10 |
| 17 | 20/25 | 17 | -0,005 -0,014 | 15 | 53 | 23 | M17x1 | 17 | 7 |
| 20 | 25/28/30 | 20 | -0,005 -0,014 | 17 | 62 | 25 | M20x1 | 17 | 11 |
| 25 | 30/32/36 | 25 | -0,005 -0,014 | 20 | 76 | 30 | M25x1,5 | 20 | 15 |
| 30 | 36/40 | 30 | -0,005 -0,015 | 25 | 72 | 38 | M30x1,5 | 25 | 9 |

Abmessungen in mm
Dimensions in mm

## 5.5 Festlager GWFF
### Fixed bearing GWFF

Lagerkombination DF
Bearing combination DF

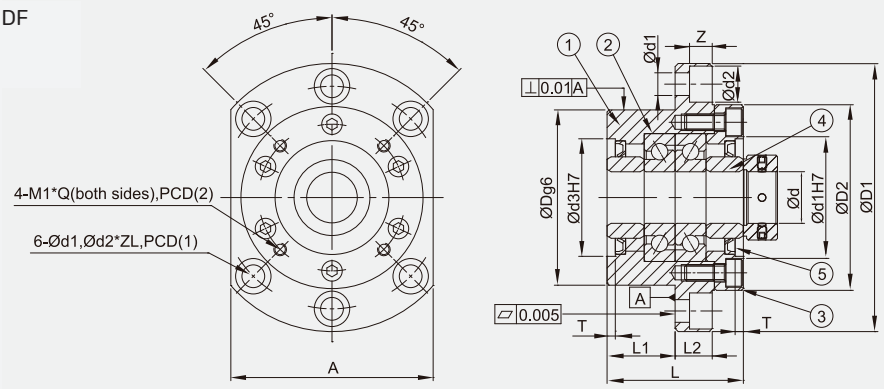


Lagerkombination DFD
Bearing combination DFD

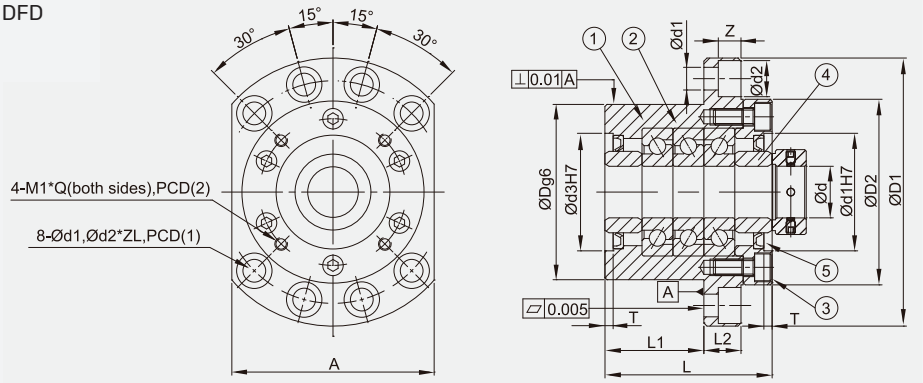


| Baugröße Size | | ød | øD | øD1 | øD2 | ød3 | L | L1 | L2 | A | PCD (1) | PCD (2) | ød1 | ød2 | Z | T | M1 | Q |
|---|---|---|---|---|---|---|---|---|---|---|---|---|---|---|---|---|---|---|
| 17 | DF | 17 | 70 | 106 | 72 | 45 | 60 | 32 | 15 | 80 | 88 | 58 | 8,7 | 14 | 8,5 | 3 | M5 | 10 |
| 20 | DF | 20 | 70 | 106 | 72 | 45 | 60 | 32 | 15 | 80 | 88 | 58 | 8,7 | 14 | 8,5 | 3 | M5 | 10 |
| 25 | DF | 25 | 85 | 130 | 90 | 57 | 66 | 33 | 18 | 100 | 110 | 70 | 10,7 | 17,5 | 11 | 4 | M6 | 14 |
| 25 | DFD | 25 | 85 | 130 | 90 | 57 | 81 | 48 | 18 | 100 | 110 | 70 | 10,7 | 17,5 | 11 | 4 | M6 | 14 |
| 30 | DF | 30 | 85 | 130 | 90 | 57 | 66 | 33 | 18 | 100 | 110 | 70 | 10,7 | 17,5 | 11 | 4 | M6 | 14 |
| 30 | DFD | 30 | 85 | 130 | 90 | 57 | 81 | 48 | 18 | 100 | 110 | 70 | 10,7 | 17,5 | 11 | 4 | M6 | 14 |
| 35 | DF | 35 | 95 | 142 | 102 | 69 | 66 | 33 | 18 | 106 | 121 | 80 | 10,7 | 17,5 | 11 | 4 | M6 | 14 |
| 35 | DFD | 35 | 95 | 142 | 102 | 69 | 81 | 48 | 18 | 106 | 121 | 80 | 10,7 | 17,5 | 11 | 4 | M6 | 14 |
| 40 | DF | 40 | 95 | 142 | 102 | 69 | 66 | 33 | 18 | 106 | 121 | 80 | 10,7 | 17,5 | 11 | 4 | M6 | 14 |
| 40 | DFD | 40 | 95 | 142 | 102 | 69 | 81 | 48 | 18 | 106 | 121 | 80 | 10,7 | 17,5 | 11 | 4 | M6 | 14 |

Abmessungen in mm
Dimensions in mm

# Lagereinheiten
## Support Units

Empfohlene Endenbearbeitung der Spindel
Recommended end machining of the spindle

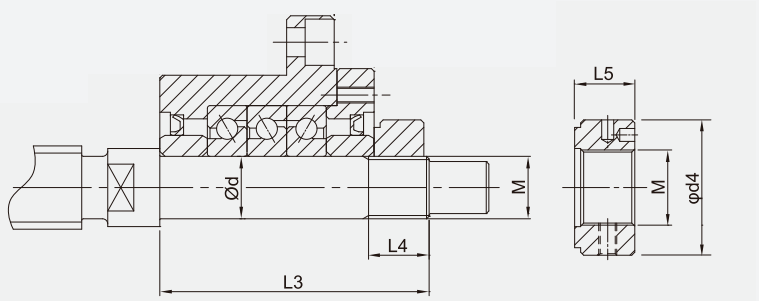


| Baugröße Size | | ød | ød4 | L3 | L4 | L5 | M |
|---|---|---|---|---|---|---|---|
| 17 | DF | 17 | 37 | 81 | 23 | 18 | M17x1 |
| 20 | DF | 20 | 40 | 81 | 23 | 18 | M20x1 |
| 25 | DF | 25 | 45 | 89 | 26 | 20 | M25x1,5 |
| 25 | DFD | 25 | 45 | 104 | 26 | 20 | M25x1,5 |
| 30 | DF | 30 | 50 | 89 | 26 | 20 | M30x1,5 |
| 30 | DFD | 30 | 50 | 104 | 26 | 20 | M30x1,5 |
| 35 | DF | 35 | 55 | 92 | 30 | 22 | M35x1,5 |
| 35 | DFD | 35 | 55 | 107 | 30 | 22 | M35x1,5 |
| 40 | DF | 40 | 60 | 92 | 30 | 22 | M40x1,5 |
| 40 | DFD | 40 | 60 | 107 | 30 | 22 | M40x1,5 |

Abmessungen in mm
Dimensions in mm

## 5.6 Loslager GAF
### Floating bearing GAF

GAF06 - GAF20

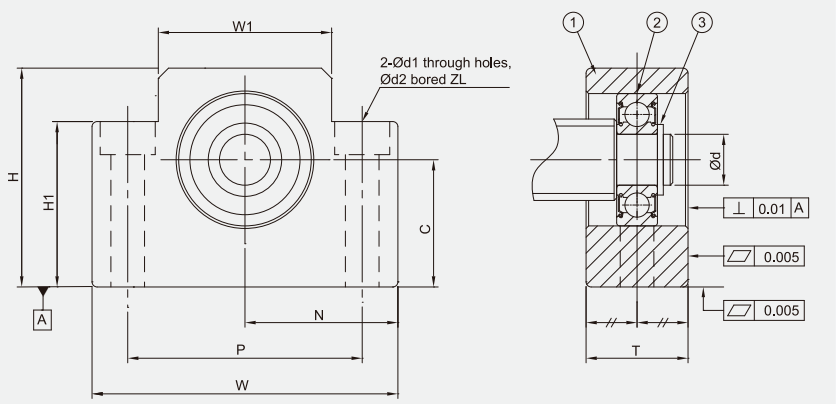


GAF25

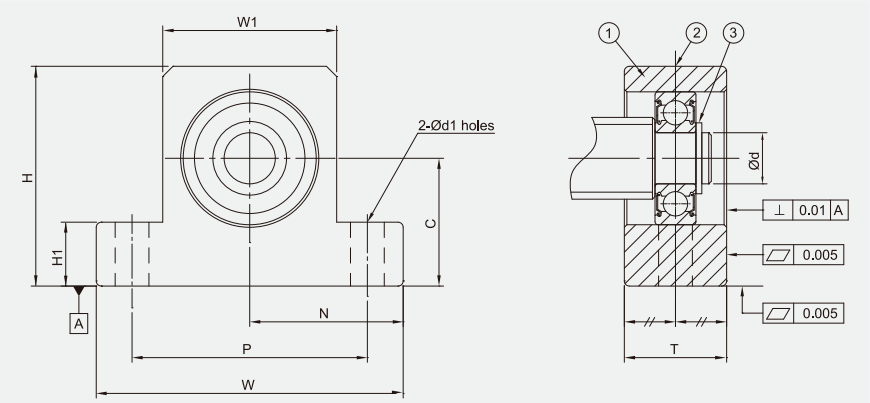


| Baugröße<br>Size | ød | T | $W_{-0,04}$ | W1 | H | H1 | $N_{\pm 0,02}$ | $C_{-0,04}$ | P | ød1 | ød2 | Z |
|---|---|---|---|---|---|---|---|---|---|---|---|---|
| 06 | 6 | 12 | 42 | 18 | 25 | 20 | 21 | 13 | 30 | 5,2 | 9,5 | 7 |
| 08 | 6 | 15 | 52 | 25 | 32 | 26 | 26 | 17 | 38 | 6,3 | 11 | 12 |
| 10 | 8 | 20 | 70 | 36 | 43 | 35 | 35 | 25 | 52 | 8,7 | 14 | 11 |
| 12 | 10 | 20 | 70 | 36 | 43 | 35 | 35 | 25 | 52 | 8,7 | 14 | 11 |
| 15 | 15 | 20 | 80 | 41 | 50 | 40 | 40 | 30 | 60 | 8,7 | 14 | 11 |
| 20 | 20 | 26 | 95 | 56 | 58 | 45 | 47,5 | 30 | 75 | 10,7 | 17 | 15 |
| 25 | 25 | 30 | 105 | 66 | 68 | 25 | 52,5 | 35 | 85 | 11 | - | - |

Abmessungen in mm
Dimensions in mm

# Lagereinheiten
## Support Units

Empfohlene Endenbearbeitung der Spindel
Recommended end machining of the spindle

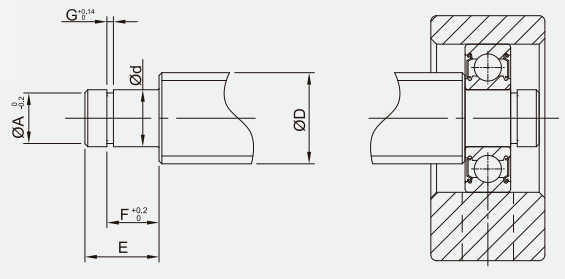


| Baugröße Size | øD | | ød | øA | E | F | G |
|---|---|---|---|---|---|---|---|
| 06 | 8 | 6 | -0,005 -0,012 | 5,7 | 9 | 6,7 | 0,8 |
| 08 | 8/10 | 6 | -0,005 -0,012 | 5,7 | 9 | 6,7 | 0,8 |
| 10 | 12/14/15 | 8 | -0,005 -0,012 | 7,6 | 10 | 7,9 | 0,9 |
| 12 | 14/15/16 | 10 | -0,005 -0,012 | 9,6 | 11 | 9,15 | 1,15 |
| 15 | 18/20 | 15 | -0,005 -0,014 | 14,3 | 13 | 10,15 | 1,15 |
| 20 | 25/28/30 | 20 | -0,005 -0,014 | 19 | 19 | 15,35 | 1,35 |
| 25 | 28/30/32 | 25 | -0,005 -0,014 | 23,9 | 21 | 16,35 | 1,35 |

Abmessungen in mm
Dimensions in mm

## 5.7 Loslager GBF
### Floating bearing GBF

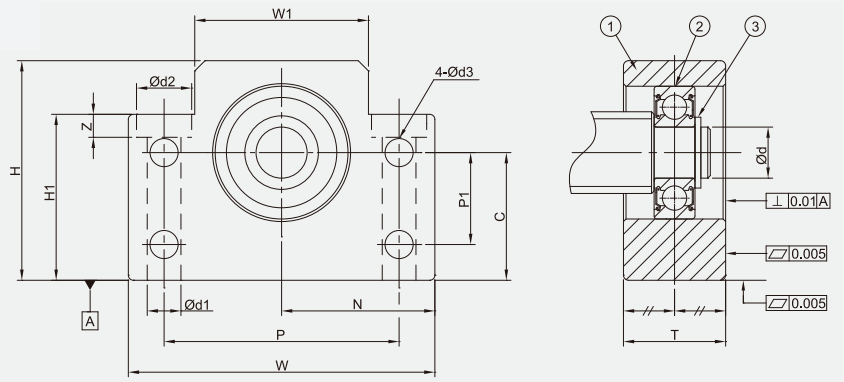


Empfohlene Endenbearbeitung der Spindel
Recommended end machining of the spindle

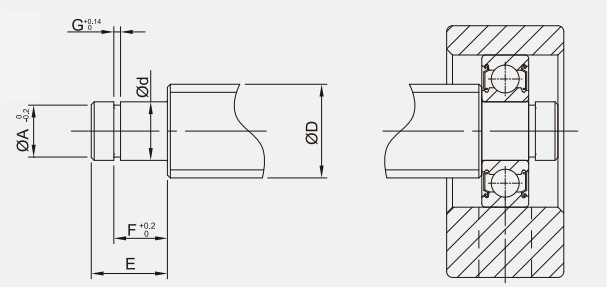


| Baugröße Size | ød | T | W -0,04 | W1 | H | H1 | N ±0,02 | C -0,04 | P | P1 | ød1 | ød2 | ød3 | Z |
|---|---|---|---|---|---|---|---|---|---|---|---|---|---|---|
| 10 | 8 | 20 | 60 | 34 | 39 | 32,5 | 30 | 22 | 46 | 15 | 6,3 | 10,8 | 5,5 | 5 |
| 12 | 10 | 20 | 60 | 34 | 43 | 32,5 | 30 | 25 | 46 | 18 | 6,3 | 10,8 | 5,5 | 1,5 |
| 15 | 15 | 20 | 70 | 40 | 48 | 38 | 35 | 28 | 54 | 18 | 6,3 | 11 | 5,5 | 6,5 |
| 17 | 17 | 23 | 86 | 50 | 64 | 55 | 43 | 39 | 68 | 28 | 8,7 | 14 | 6,6 | 8,6 |
| 20 | 20 | 26 | 88 | 52 | 60 | 50 | 44 | 34 | 70 | 22 | 8,7 | 14 | 6,6 | 8,6 |
| 25 | 25 | 30 | 106 | 64 | 80 | 70 | 53 | 48 | 85 | 33 | 10,7 | 17,5 | 9 | 11 |
| 30 | 30 | 32 | 128 | 76 | 89 | 78 | 64 | 51 | 102 | 33 | 13,7 | 20 | 11 | 13 |
| 35 | 35 | 32 | 140 | 88 | 96 | 79 | 70 | 52 | 114 | 35 | 13,7 | 20 | 11 | 13 |
| 40 | 40 | 37 | 160 | 100 | 110 | 90 | 80 | 60 | 130 | 37 | 17,7 | 26 | 14 | 17,5 |

| | Empfohlene Endenbearbeitung der Spindel<br>Recommended end machining of the spindle | | | | |
|---|---|---|---|---|---|
| Baugröße Size | øD | ød | øA | E | F | G |
| 10 | 12/14/15 | 8 -0,005 -0,012 | 7,6 | 10 | 7,9 | 0,9 |
| 12 | 14/15/16 | 10 -0,005 -0,012 | 9,6 | 11 | 9,15 | 1,15 |
| 15 | 18/20 | 15 -0,005 -0,014 | 14,3 | 13 | 10,15 | 1,15 |
| 17 | 20/25 | 17 -0,005 -0,014 | 16,2 | 16 | 13,15 | 1,15 |
| 20 | 25/28/30 | 20 -0,005 -0,014 | 19 | 19 | 15,35 | 1,35 |
| 25 | 30/32/36 | 25 -0,005 -0,014 | 23,9 | 20 | 16,35 | 1,35 |
| 30 | 36/40 | 30 -0,005 -0,015 | 28,6 | 21 | 17,75 | 1,75 |
| 35 | 40/45 | 35 -0,005 -0,015 | 33 | 22 | 18,75 | 1,75 |
| 40 | 50 | 40 -0,005 -0,015 | 37,5 | 23 | 19,95 | 1,95 |

Abmessungen in mm
Dimensions in mm

# Lagereinheiten
# Support Units

## 5.8 Loslager GEF
### Floating bearing GEF

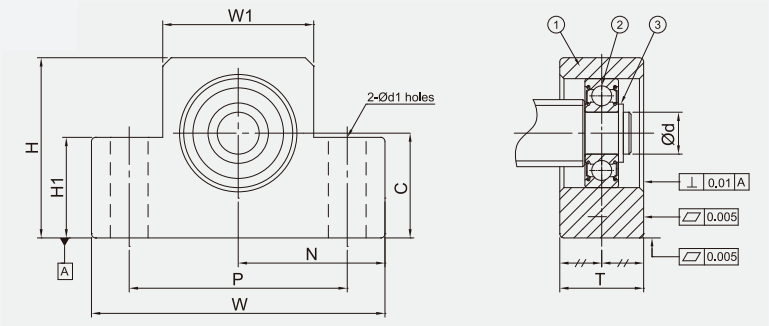


Empfohlene Endenbearbeitung der Spindel
Recommended end machining of the spindle

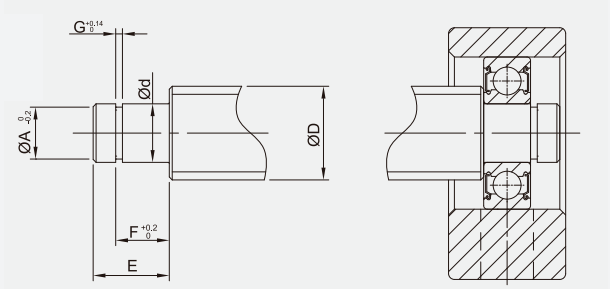


| Baugröße Size | ød | T | W -0,04 | W1 | H | H1 | N ±0,02 | C -0,04 | P | ød1 |
|---|---|---|---|---|---|---|---|---|---|---|
| 06 | 6 | 12 | 42 | 20 | 25 | 12 | 21 | 13 | 30 | 5,2 |
| 08 | 6 | 14 | 52 | 27 | 32 | 16 | 26 | 17 | 38 | 6,3 |
| 10 | 8 | 20 | 70 | 36 | 43 | 24 | 35 | 25 | 52 | 9 |
| 12 | 10 | 20 | 70 | 36 | 43 | 24 | 35 | 25 | 52 | 9 |
| 15 | 15 | 20 | 80 | 41 | 49 | 25 | 40 | 30 | 60 | 9 |
| 20 | 20 | 26 | 95 | 56 | 58 | 25 | 47,5 | 30 | 75 | 11 |

| | Empfohlene Endenbearbeitung der Spindel<br>Recommended end machining of the spindle | | | | | |
|---|---|---|---|---|---|---|
| Baugröße Size | øD | ød | øA | E | F | G |
| 06 | 8 | 6 -0,005 -0,012 | 5,7 | 9 | 6,8 | 0,8 |
| 08 | 10 | 6 -0,005 -0,012 | 5,7 | 9 | 6,8 | 0,8 |
| 10 | 12/14/15 | 8 -0,005 -0,012 | 7,6 | 10 | 7,9 | 0,9 |
| 12 | 14/15/16 | 10 -0,005 -0,012 | 9,6 | 11 | 9,15 | 1,15 |
| 15 | 18/20 | 15 -0,005 -0,014 | 14,3 | 13 | 10,15 | 1,15 |
| 20 | 25/28/30 | 20 -0,005 -0,014 | 19 | 19 | 15,35 | 1,35 |

Abmessungen in mm
Dimensions in mm

## 5.9 Loslager GFF
### Floating bearing GFF

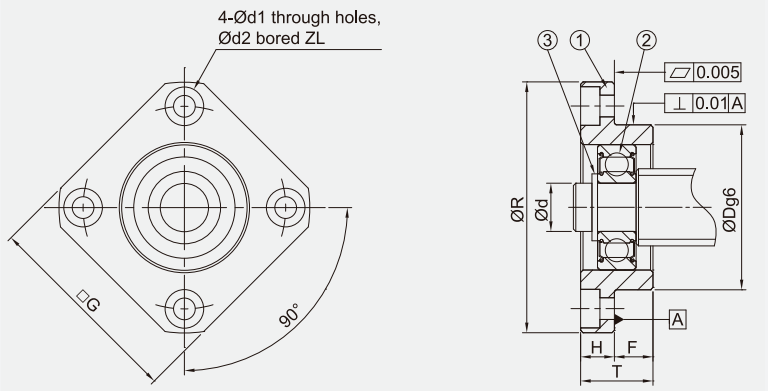


### Empfohlene Endenbearbeitung der Spindel
Recommended end machining of the spindle

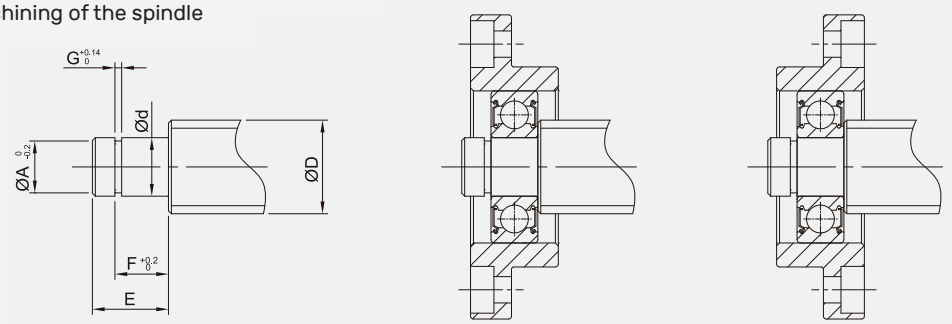


| Baugröße Size | ød | T | G | øR | H | F | øDg6 | PCD | ød1 | ød2 | ZL |
|---|---|---|---|---|---|---|---|---|---|---|---|
| 06 | 6 | 10 | 28 | 36 | 6 | 4 | 22 -0,007 -0,020 | 28 | 3,4 | 6 | 3,3 |
| 10 | 8 | 12 | 35 | 43 | 7 | 5 | 28 -0,007 -0,020 | 35 | 3,4 | 6 | 3,3 |
| 12 | 10 | 15 | 42 | 52 | 7 | 8 | 34 -0,009 -0,025 | 42 | 4,2 | 8 | 4,4 |
| 15 | 15 | 17 | 52 | 63 | 9 | 8 | 40 -0,009 -0,025 | 50 | 5,2 | 9,5 | 5,4 |
| 17 | 17 | 20 | 61 | 77 | 11 | 9 | 50 -0,009 -0,025 | 62 | 6,6 | 11 | 6,5 |
| 20 | 20 | 20 | 68 | 85 | 11 | 9 | 57 -0,010 -0,029 | 70 | 6,6 | 11 | 6,5 |
| 25 | 25 | 24 | 79 | 98 | 14 | 10 | 63 -0,010 -0,029 | 80 | 8,7 | 14 | 8,6 |
| 30 | 30 | 27 | 93 | 117 | 18 | 9 | 75 -0,010 -0,029 | 95 | 10,7 | 17,5 | 10,8 |

| | Empfohlene Endenbearbeitung der Spindel<br>Recommended end machining of the spindle | | | | | |
|---|---|---|---|---|---|---|
| Baugröße Size | øD | ød | øA | E | F | G |
| 06 | 8 | 6 -0,005 -0,012 | 5,7 | 9 | 6,8 | 0,8 |
| 10 | 12/14/15 | 8 -0,005 -0,012 | 7,6 | 10 | 7,9 | 0,9 |
| 12 | 14/15/16 | 10 -0,005 -0,012 | 9,6 | 11 | 9,15 | 1,15 |
| 15 | 18/20 | 15 -0,005 -0,014 | 14,3 | 13 | 10,15 | 1,15 |
| 17 | 20/25 | 17 -0,005 -0,014 | 16,2 | 16 | 13,15 | 1,15 |
| 20 | 25/28/30 | 20 -0,005 -0,014 | 19 | 19 | 15,35 | 1,35 |
| 25 | 30/32/36 | 25 -0,005 -0,014 | 23,9 | 20 | 16,35 | 1,35 |
| 30 | 36/40 | 30 -0,005 -0,015 | 28,6 | 21 | 17,75 | 1,75 |

Abmessungen in mm
Dimensions in mm

Hauptstrasse 8
D-85630 Grasbrunn (Harthausen)

Telefon: +49 (0)8106 99935 10
Telefax: +49 (0)8106 99935 14

info@getotec.de
www.getotec.de